[redacted]_3500 Kg

AUSA

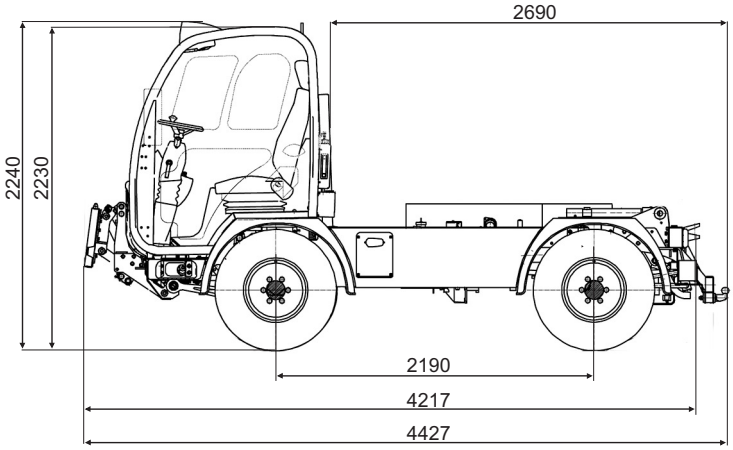

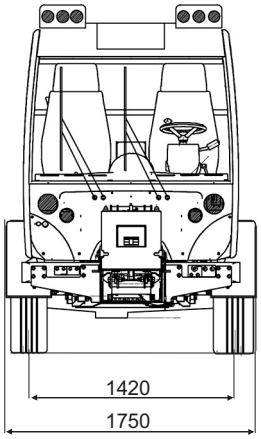

TECHNICAL SPECIFICATIONS

[redacted]		[redacted]	[redacted]		[redacted]
[redacted]		[redacted]	[redacted]		[redacted]
[redacted]	[redacted]	[redacted]			
[redacted]	[redacted]	[redacted]			
[redacted]	[redacted]	[redacted]			
	[redacted]	[redacted]	[redacted]		[redacted]
	[redacted]	[redacted]	[redacted]		[redacted]
	[redacted]	[redacted]	[redacted]	[redacted]	[redacted]
[redacted]		[redacted]	[redacted]		[redacted]
[redacted]		[redacted]	[redacted]	[redacted]	[redacted]
[redacted]		[redacted]	[redacted]		[redacted]
	[redacted]	[redacted]	[redacted]		[redacted]
[redacted]	[redacted]	[redacted]	[redacted]		[redacted]

STANDARD EQUIPMENT

[redacted]	[redacted]	[redacted]	[redacted]
[redacted]	[redacted]	[redacted]	[redacted]
[redacted]	[redacted]	[redacted]	[redacted]

OPTIONAL EQUIPMENT

[redacted]	[redacted]	[redacted]	[redacted]
[redacted]	[redacted]	[redacted]	[redacted]
	[redacted]	[redacted]	[redacted]
[redacted]	[redacted]	[redacted]	[redacted]

ADITIONAL ACCESSORIES

[redacted]	[redacted]
[redacted]	[redacted]
[redacted]	[redacted]
[redacted]	[redacted]
[redacted]	[redacted]
[redacted]	[redacted]
[redacted]	[redacted]
[redacted]	[redacted]
[redacted]	[redacted]
[redacted]	[redacted]

AUSA reserves the right to make any changes in the specifications without prior notice.

MKT22023.01-08/2010