[redacted]_3500 Kg

AUSA

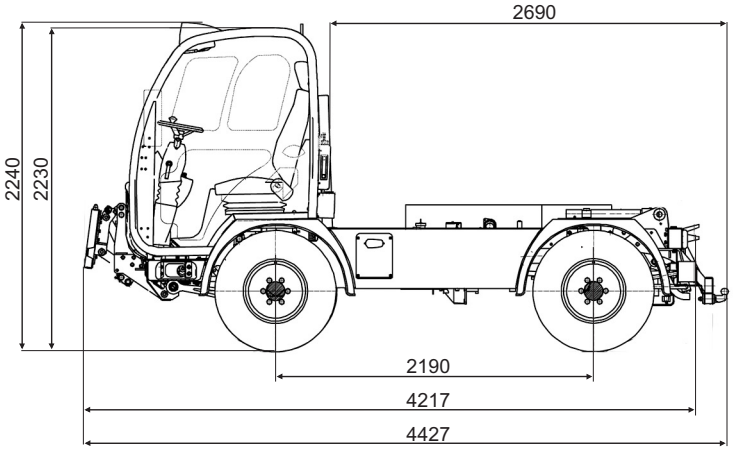

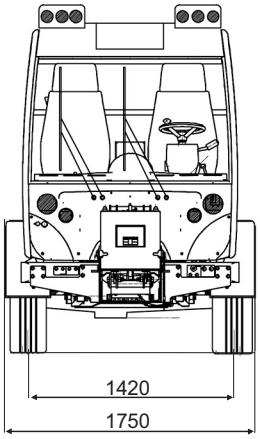

ESPECIFICACIONES TÉCNICAS

[redacted]		[redacted]	[redacted]		[redacted]
[redacted]		[redacted]	[redacted]		[redacted]
[redacted]	[redacted]	[redacted]			[redacted]
[redacted]	[redacted]	[redacted]			[redacted]
[redacted]		[redacted]	[redacted]		[redacted]
	[redacted]	[redacted]	[redacted]		[redacted]
	[redacted]	[redacted]	[redacted]		[redacted]
	[redacted]	[redacted]	[redacted]		[redacted]
	[redacted]	[redacted]	[redacted]		[redacted]
	[redacted]	[redacted]	[redacted]		[redacted]
[redacted]		[redacted]	[redacted]		[redacted]
[redacted]		[redacted]	[redacted]		[redacted]
		[redacted]	[redacted]		[redacted]
	[redacted]	[redacted]	[redacted]		[redacted]
[redacted]	[redacted]	[redacted]	[redacted]		[redacted]

EQUIPAMIENTO DE SERIE

[redacted]	[redacted]	[redacted]	[redacted]
[redacted]	[redacted]	[redacted]	[redacted]
[redacted]	[redacted]	[redacted]	[redacted]

EQUIPAMIENTO OPCIONAL

[redacted]	[redacted]	[redacted]	[redacted]
[redacted]	[redacted]	[redacted]	[redacted]
[redacted]	[redacted]	[redacted]	[redacted]
[redacted]	[redacted]	[redacted]	[redacted]

IMPLEMENTOS ADICIONALES

[redacted]	[redacted]
[redacted]	[redacted]
[redacted]	[redacted]
[redacted]	[redacted]
[redacted]	[redacted]
[redacted]	[redacted]
[redacted]	[redacted]
[redacted]	[redacted]
[redacted]	[redacted]
[redacted]	[redacted]

MKT22021.01-08/2010