[illegible] _2000 Kg

AUSA

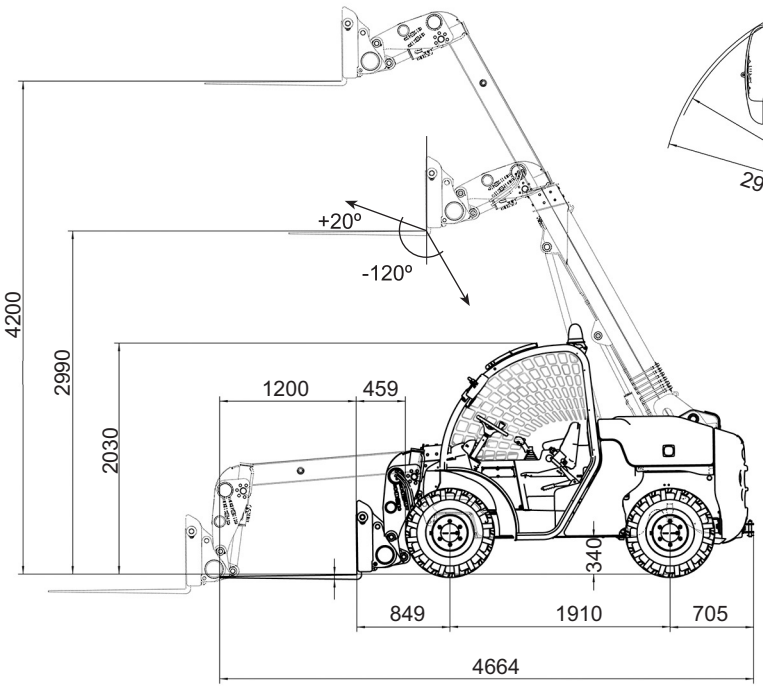
+20º
-120º
4200
2990
2030
1200
459
340
849
1910
705
4664

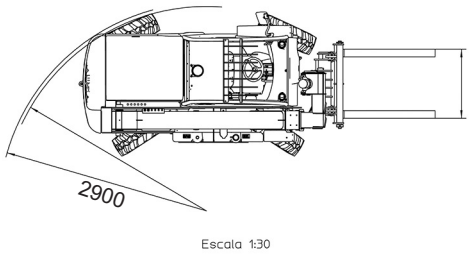
2900
Escala 1:30

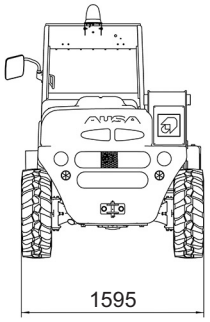
1595

[illegible]	[illegible]
[illegible]	[illegible]
[illegible]	[illegible]
[illegible]	[illegible]