□□□□□□_1300 Kg

AUSA

MAST CHART
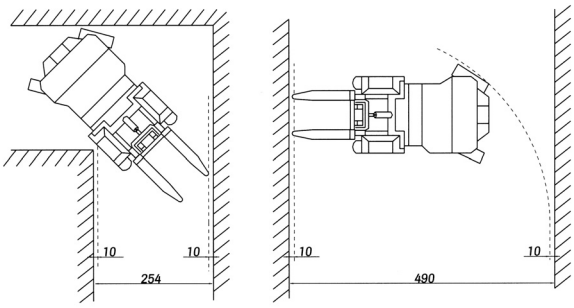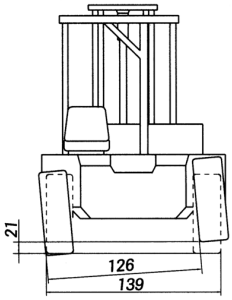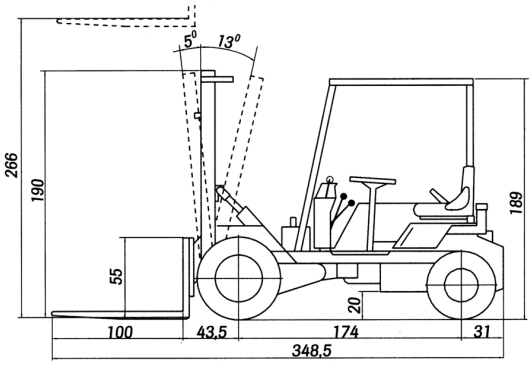
Type	Maximum lifting height (mm)	Free lift (mm)	Mast height retracted (mm)	Max. height (mm)	Load (Kg)
Duplex(st.)	2660	150	1980	3310	1300
Duplex	2250	150	1775	2900	1300
Duplex	3300	150	2300	3950	1300