AUSA

D 201 RH AIRPORT

AUSA

www.ausa.com

AUSA Center, S.L. ● Ctra. de Vic, Km 2.8 - P.O.B. 194, 08243 Manresa - BARCELONA (ESPAÑA) Tel.: +34 93 874 73 11 E-mail: ausa@ausa.com

ISO 9001 ISO 14001

(Sede central AUSA-Manresa)

AUSA Madrid ● Pol. Ind. Coslada-Marconi 15-17, 28823 Coslada - MADRID (ESPAÑA) Tel.: +34 91 669 00 06 E-mail: ausa.madrid@ausa.com
AUSA France ● Z. I. Saint Charles-Rue de Zürich, 66000 PERPIGNAN (FRANCE) Tel.: +33 (0) 4 68 54 38 97 E-mail: ausa.france@ausa.com
AUSA Verkauf & Service Deutschland ● Heinrich - Welken Str. 5, 59069 HAMM - RHYNERN (GERMANY) Tel.: +49 (0) 2385-9359362 E-mail: ausa.deutschland@ausa.com
BEIJING Rep. office ● Address Room 527, HengXiang Building, Tuanjiehu Nanli, Chaoyang District. - Beijing 100026 CHINA
Tel: 86-10-8597 1983 - Fax: 86-10-8597 1993 - E-mail: ausa.china@ausa.com
AUSA UK ● Sales: 07970639988 E-mail: ausa.uk@ausa.com
AUSA Northamerica Corp. ● E-mail: ausa.corp@ausa.com

D 201 RH
AIRPORT

AUSA

www.ausa.com

DIMENSIONS (mm)	D 201 RH
A	3000
B	1640
C	800
D	1800
E	1540
H	2280

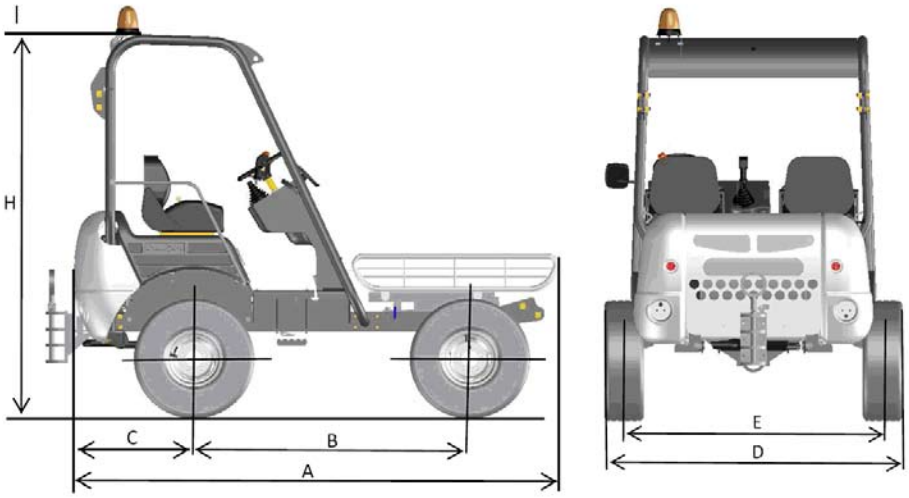

TECHNICAL SPECIFICATIONS		D 201 RH
Trailer capacity (Kg)	Driving on public roads	
	Trailer without brakes	750
	Trailer with brakes	1500
	Driving within private areas	
	Trailer without brakes	1000
	Trailer with brakes	3000
Pulling force (Kg)		960
Chassis		Rigid
Engine	Diesel	Kubota V1505
	Power acc./SAE J 1995 (KW/CV)	22.7 / 30.9
	Nº of cylinders	4
	Cooling system	Water
Traction		4x4 permanent Compen System
Transmission		2-speed hydrostatic. Electric gear inverter on the joystick
Engine starting system		Electric
Max. Speed (Km/h)		18
Unladen weight (Kg)		2000
Tyres	Front	10.0 / 80 - 12
	Rear	10.0 / 80 - 12
External turning circle (mm)		4300
Steering		Hydraulic. Working pressure 80 bar
Hydraulic tank capacity (l)		40
Service brake		Sealed oil-immersed multidisc
Parking brake		Sealed oil-immersed multidisc
STANDARD EQUIPMENT		Anti vandal system
		Audible reverse warning
		2 ergonomic seat with seat belt
		Comb towing hook, for several drawbar heights
		ROPS protection
		Rotating beacon
		Rear view mirror
		Homologated lighting equipment
OPTIONAL EQUIPMENT		Closed cabin with heater
		Air conditioning

AUSA reserves the right to make any changes in the specifications without prior notice.

MKT20027.00-05.2010