[illegible] 3.000 kg

[illegible] 3.000 kg

[illegible] 2.500 kg

[illegible] 2.500 kg

[illegible] 3.500 kg

[illegible] 4.000 kg

AUSA

DIMENSIONS (mm)	[illegible]	[illegible]	[illegible]	[illegible]	[illegible]	[illegible]
A	1873	1852	1503	1695	1852	1866
B	1668	1740	1694	1700	1740	1838
C	1858	1858	1690	1875	1858	1858
E	1487	1506	1500	1540	1506	1590
F	2956	2956	2915	2924	2956	2956
G	398	398	347	363	395	395
H	770	1024	1050	980	1024	1200
I	1932	1932	1920	1920	1932	1950
J	1025	1025	1025	995	1025	1007
K	3792	4120	3975	4000	4120	4353
L	2626	3105	3070	3230	3105	3150
M	330	590	660	590	590	766
N	775	1035	1050	1250	1035	860
T	2770	2770	2705	2705	2770	2770
U	-	327	389	250	327	502
W	1940	1940	1909	1909	1940	1940
O	-	-	-	2300	-	-
P	-	-	-	2140	-	-
Q	-	-	-	1850	-	-
R	-	-	-	3830	-	-

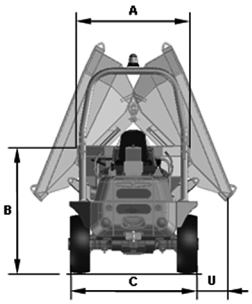

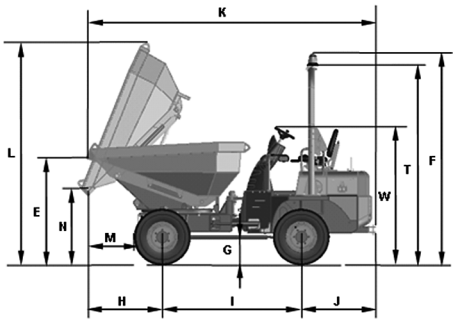

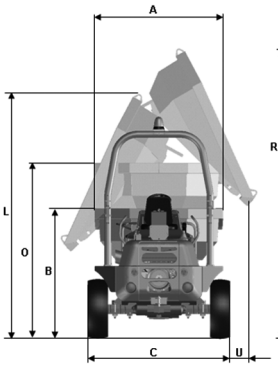

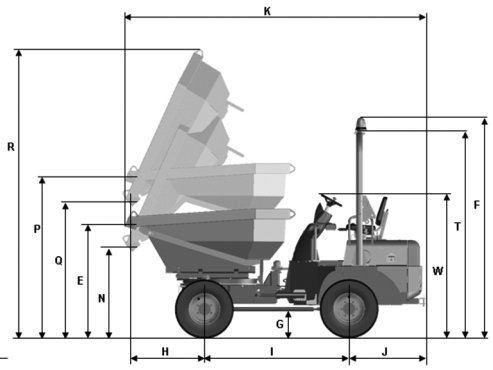

[illegible]

[illegible]	[illegible]	[illegible]	[illegible]	[illegible]	[illegible]	[illegible]
[illegible]	[illegible]		[illegible]		[illegible]	[illegible]
[illegible]	[illegible]	[illegible]		[illegible]	[illegible]	
[illegible]	[illegible]					
[illegible]	[illegible]	[illegible]	[illegible]	[illegible]	[illegible]	[illegible]
[illegible]	[illegible]	[illegible]	[illegible]	[illegible]	[illegible]	[illegible]
[illegible]	[illegible]	[illegible]	[illegible]	[illegible]	[illegible]	[illegible]
[illegible]	[illegible]		[illegible]			[illegible]
[illegible]	[illegible]		[illegible]			[illegible]
[illegible]			[illegible]			
[illegible]	[illegible]					
[illegible]	[illegible]					
[illegible]	[illegible]		[illegible]			
[illegible]	[illegible]		[illegible]			
[illegible]	[illegible]		[illegible]